Specification Sheet

Revision Date :10/11/09

DESCRIPTION: BOX ABS HAND HELD 144X89X33 MM BLACK	PART NUMBER: H 0285

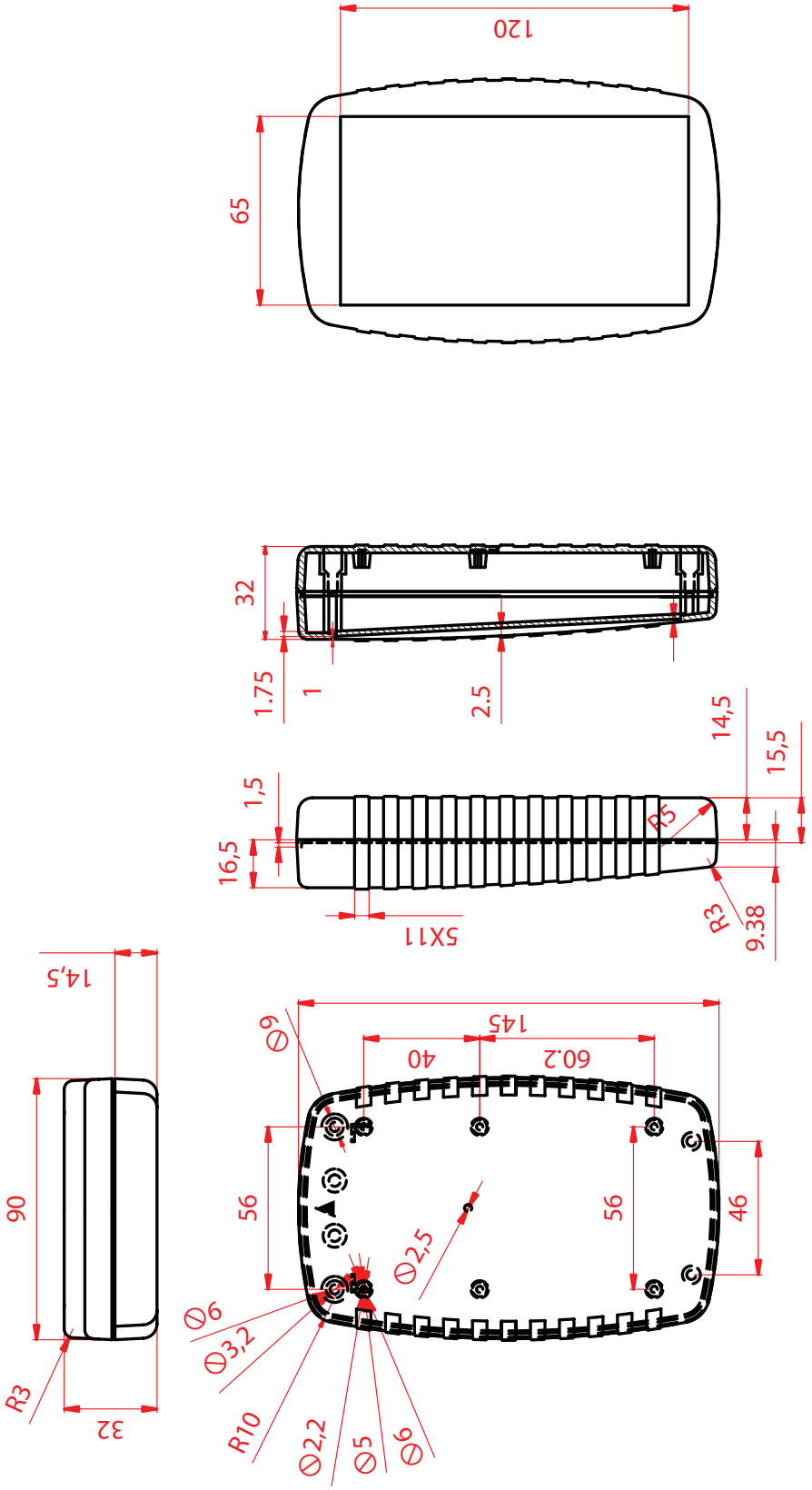

All measurements in mm

ALTRONIC DISTRIBUTORS Pty. Ltd.
ATF Altronic Unit Trust ACN:008 801 161 ABN:84 177 396 871

Phone: +61 9428 2199
Fax: +61 9428 2198
Internet: www.altronics.com.au